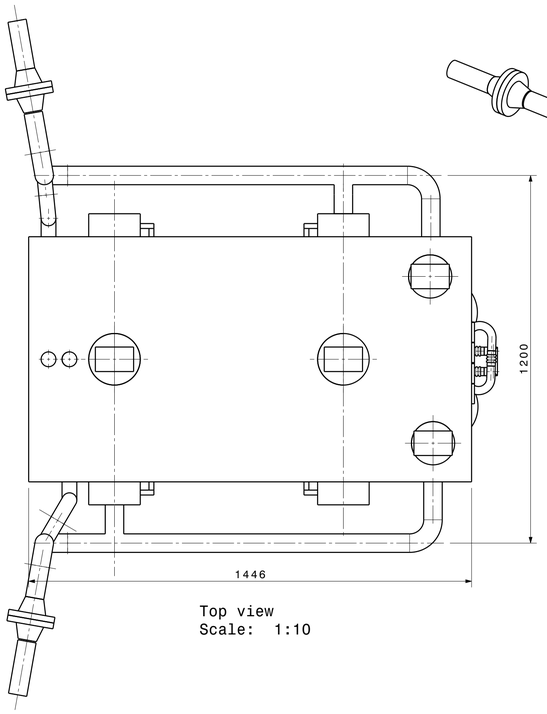

Top view
Scale: 1:10

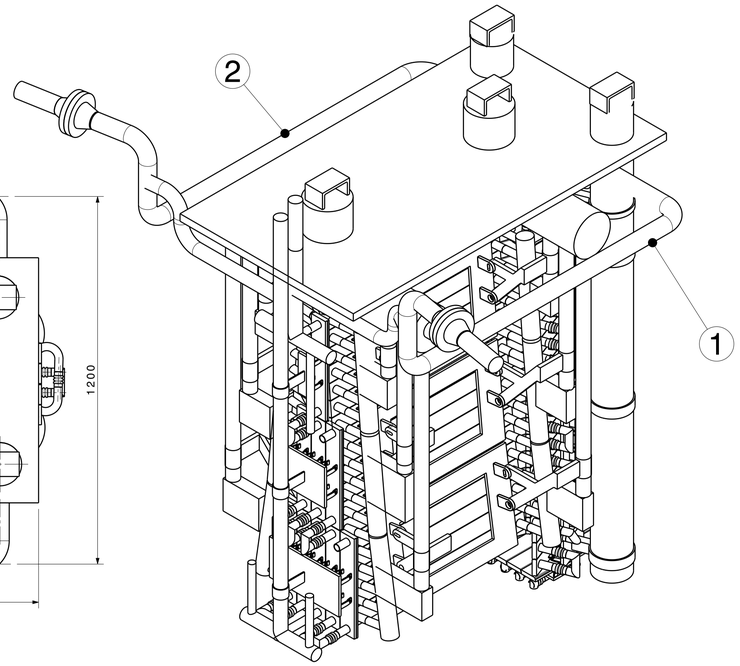

Isometric view
Scale: 1:10

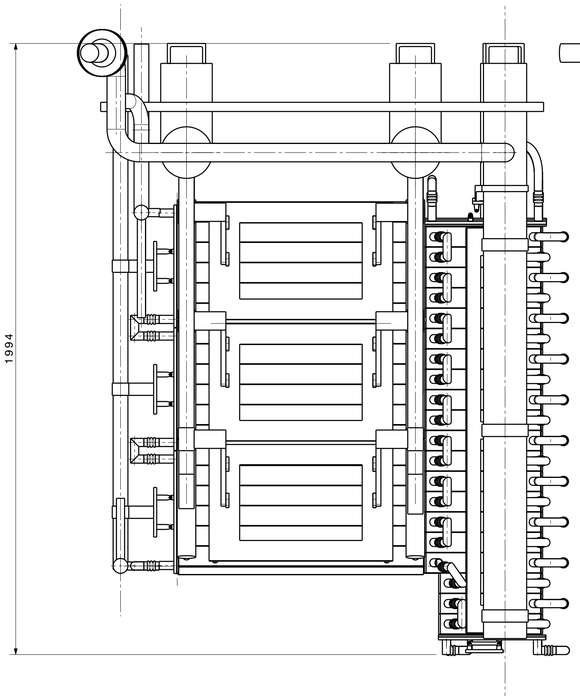

Front view
Scale: 1:10

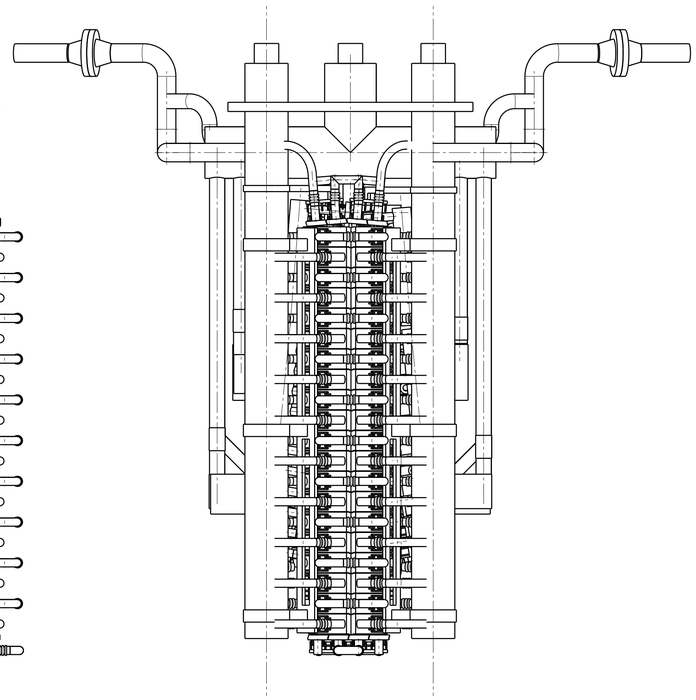

Right view
Scale: 1:10

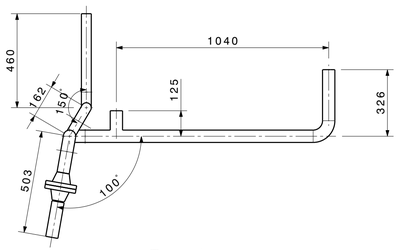

Top view
Scale: 1:15

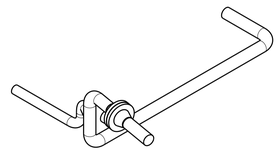

Isometric view
Scale: 1:15

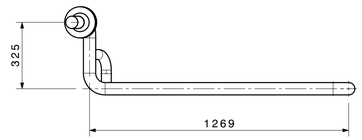

Front view
Scale: 1:15

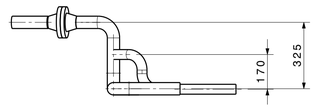

Right view
Scale: 1:15

1 .INLET

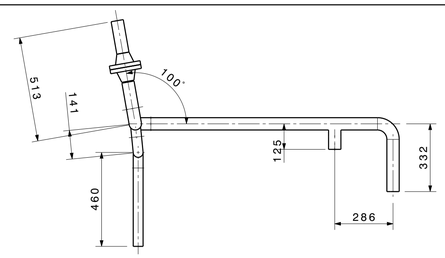

Top view
Scale: 1:15

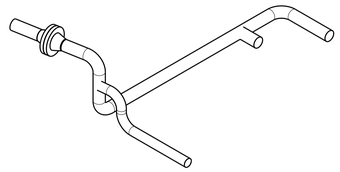

Isometric view
Scale: 1:15

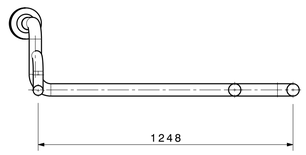

Front view
Scale: 1:15

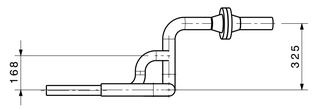

Right view
Scale: 1:15

2 .OUTLET

NOTE:	
1	3D MODEL SHOWN IN THIS SHEET IS FOR THE SAKE OF UNDERSTANDING ONLY FOR THE VENDORS.
2	THE SCOPE OF SUPPLY FROM THE VENDOR IS AS LISTED IN THE BOM.
3	ALL PIPES ARE OF SCH.10S.
4	REQUIRED PIPES & BENDS ARE FREE ISSUE OF MATERIAL.

DRG.NO	▽ 8-25	▽▽ 1.6-8	▽▽▽ 0.025-1.6	▽▽▽▽ < 0.025													
CO-ORDINATED BY																	
MACHINING DEVIATIONS FOR NON-TOLERANCED DIMENSIONS																	
LENGTH IN mm OF SHORTER SIDE OF ANGLES					LENGTH OR DIA	UPTO 6	6-30	30-120	120-315								
UPTO 10	10-50	50-120	OVER 120-400														
±1'	±0°-30'	±0°-20'	±0°-10'			±0.1	±0.2	±0.3	±0.5								

REV	ZONE	DESCRIPTION	DATE	REMARKS	APPROVED BY

REVISION COLUMN

NBI GROUP:		SIZE A3	INSTITUTE FOR PLASMA RESEARCH BHAT, GANDHINAGAR-382 428.
ALL DIMENSIONS ARE IN 'mm' UNLESS OTHERWISE STATED			
SCALE	-	DATE	THIRD ANGLE PROJECTION
DRAWN	ARK	-	TITLE ION DUMP ASSY.
DESIGNED			REF DRG NO: REV R0
APPROVED			DRG.NO 2.04.02.037 SHEET 01 OF 01